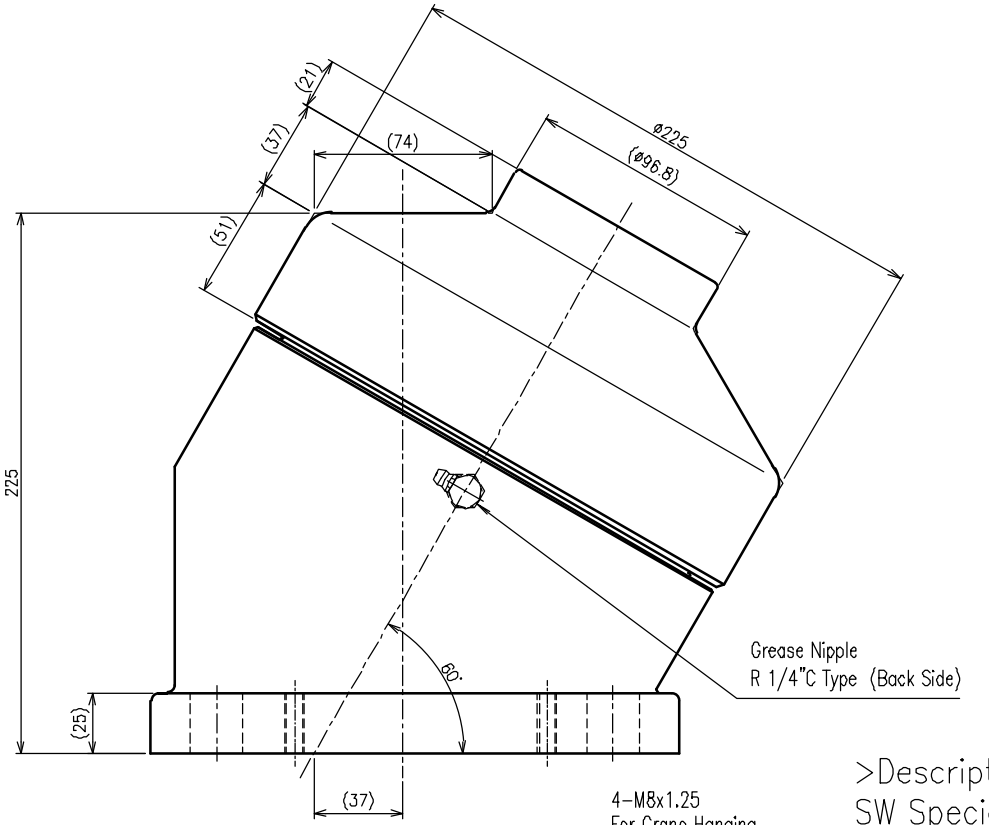

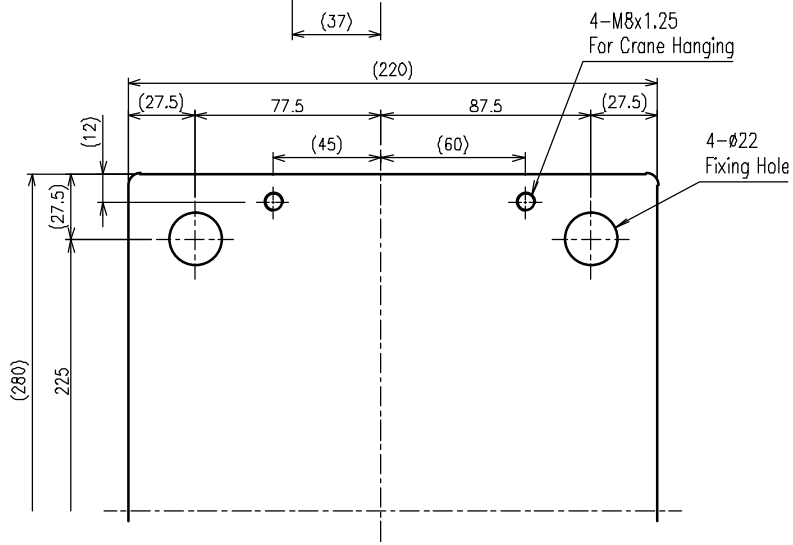

>Description
SW Special Wheel
SW-225-K Type
Unit = mm

>Specification
Product Weight = 50kg
Load Capacity = 2500kgf

Head = S45C (Hardend)
Body = FC250